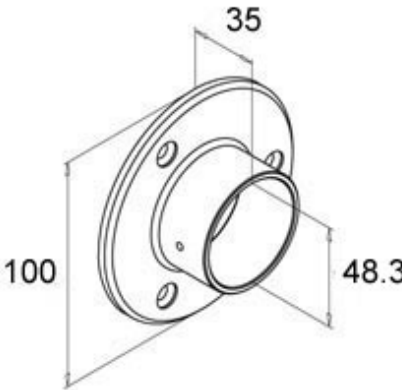
35
100
48.3